Dial Bore Gauges

Ceramic Tip

YAMAYO offers Dial Bore Gauges with interchangeable anvils and necessary accessories to perform close tolerance measurements of holes, taper and roundness.

FEATURES

- Supplied with interchangeable anvils in different sizes.
- The Dial indicator is fully protected by a rugged cover.
- Packed as a set with all necessary accessories.

SPECIFICATIONS & DIMENSIONS

(mm)

Order No.	Range	Indicator	Accuracy (±)	Repeatability)
431-010	6-10mm	0.01-5mm	0.012mm	0.003mm
432-018	10-18.5mm	0.01-5mm	0.012mm	0.003mm
433-035	18-35mm	0.01-10mm	0.015mm	0.003mm
433-060	35-60mm	0.01-10mm	0.018mm	0.003mm
433-160	50-160mm	0.01-10mm	0.018mm	0.003mm
433-250	160-250mm	0.01-10mm	0.018mm	0.003mm
403-450	250-450mm	0.01-10mm	0.018mm	0.003mm

(mm)
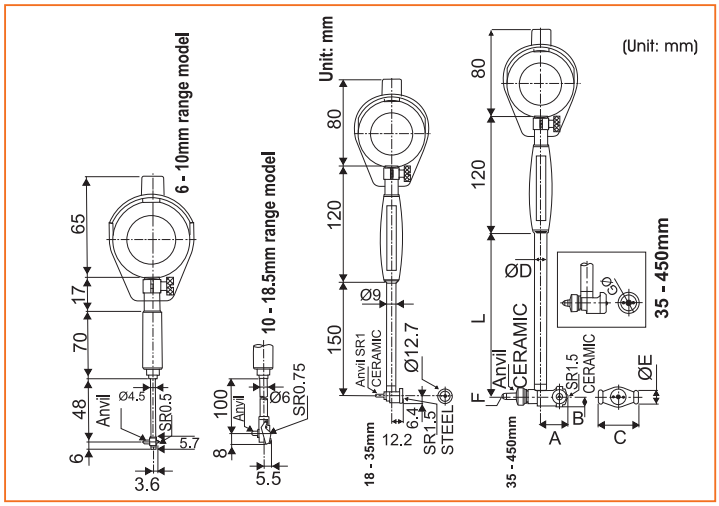
Order No.	A	B	C	DØ	EØ	GØ	L
433-060	12.2	6.4	27	12.8	13	14	150
433-160	26	9	27	12.8	13	14	150
433-250	56.5	13	74.5	12.8	15	20	409
433-450	86.5	15	101.5	14.5	15	20	409